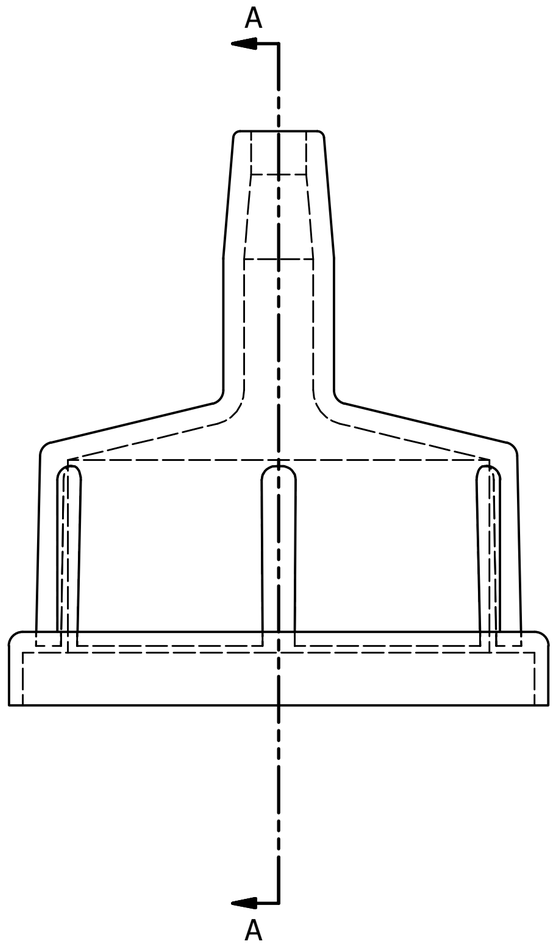

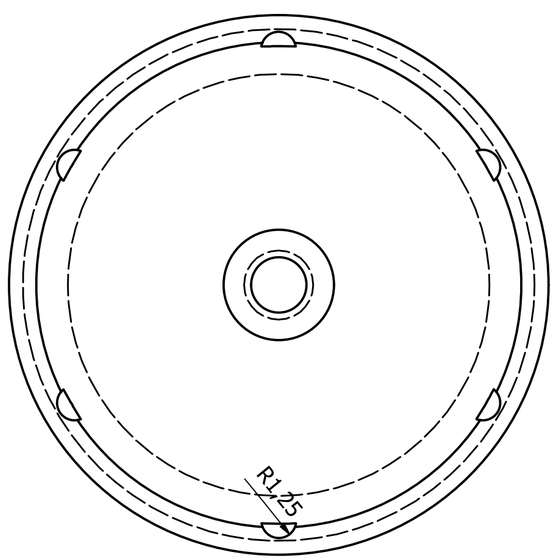

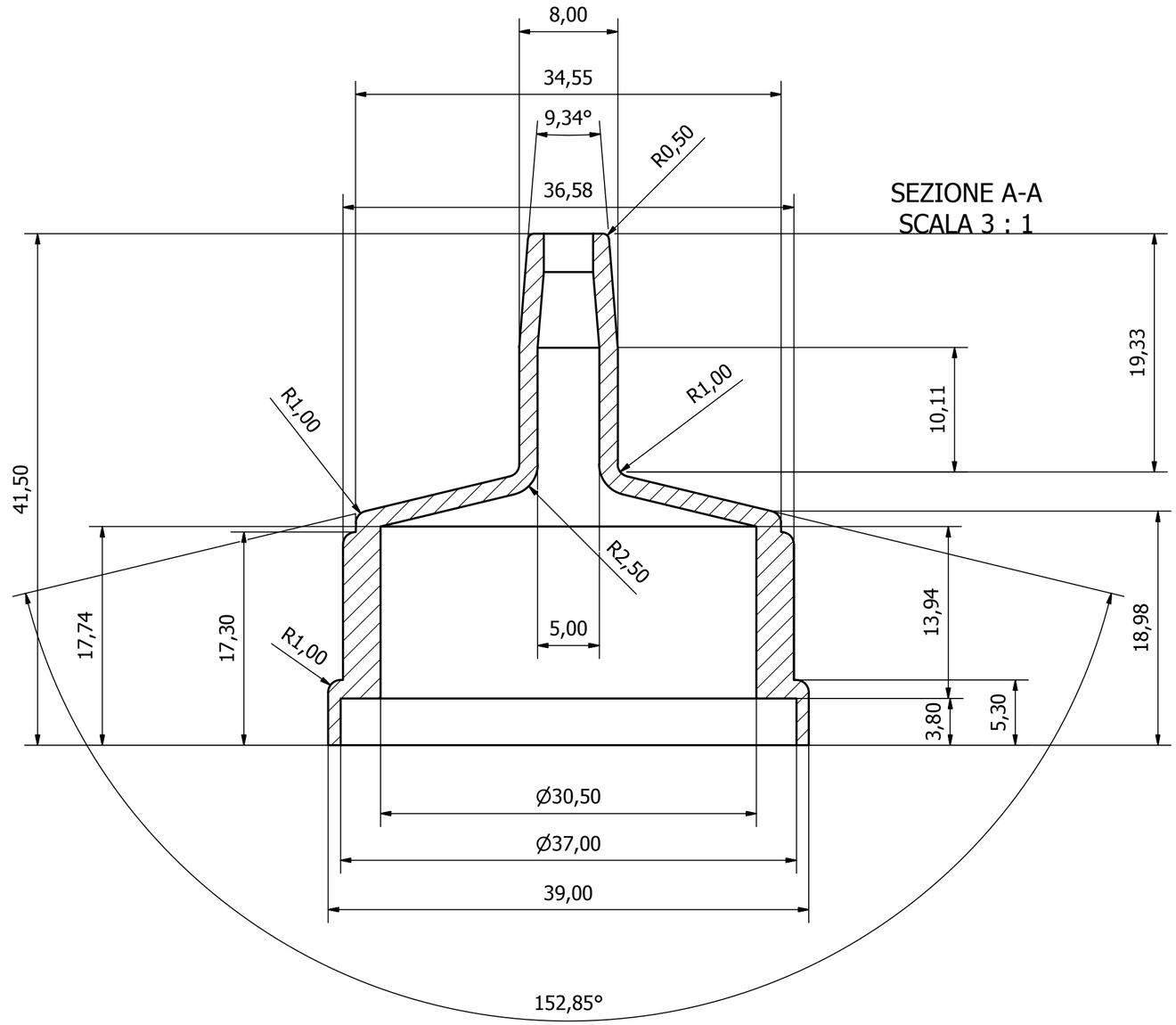

DRAWN Michele T	06/03/2015	Plastik srl
CHECKED		TITLE
QA		Codulo Per FI0915 RF
MFG		
APPROVED		SIZE C / DWG NO Codulo FI0915 RF - CO0906-1 / REV
		SCALE / SHEET 1 OF 1